10A 1 Gang Intermediate Switch - Traditional Plate

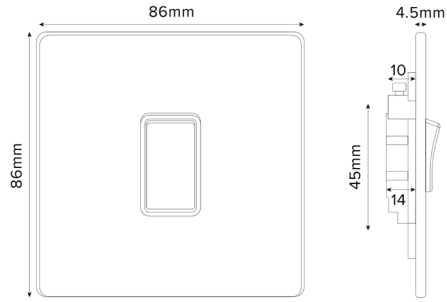

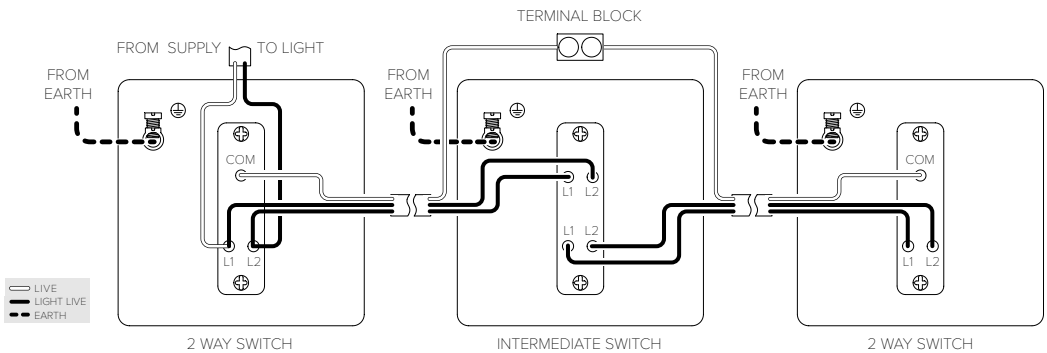

TECHNICAL SPECIFICATION

Standard(s)	BS EN 60669-1
Voltage Rating	10 A(X), 250V~
Contact Gap	Normal Gap
Mounting Box Depth (Min)	25mm
Terminal Capacity	4 x 1.0mm^2, 4 x 1.5mm^2, 2 x 2.5mm^2, 1 x 4.0mm^2
Earth Terminal Capacity	4 x 1.0mm^2, 4 x 1.5mm^2, 2 x 2.5mm^2, 1 x 4.0mm^2
Fixing Centres	60.3mm
Size	86mm x 86mm x 4.5mm (Plate thickness)
Product Class 1	Face plate must be earthed
Ambient Operating Temperature	-5° to +40°C
Recommended Location	Internal Use Only
Maximum Installation Altitude	2000m
IP Rating	IP2XD
Switched Poles	Single
Mains Frequency	50hz - 60hz
Contact Gap Minimum	3mm